THIS COPY IS PROVIDED ON A RESTRICTED BASIS AND IS NOT TO BE USED IN ANY WAY DETRIMENTAL TO THE INTERESTS OF PANDUIT CORP.

E

PANDUIT PART NUMBER	WEIGHT
FRT6X4	1.22 LB/EACH (553g/EACH)

G

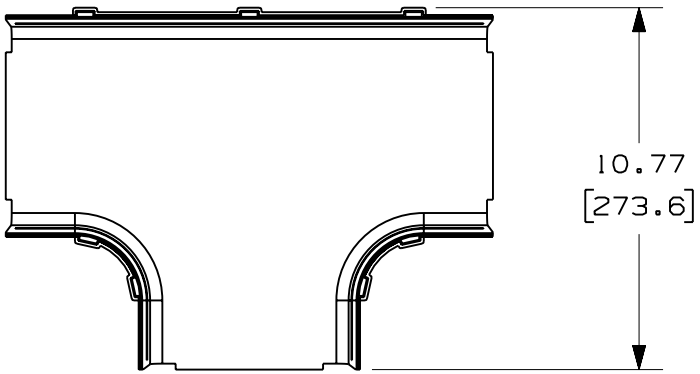

H NOTES:

1. SEE CURRENT CATALOG FOR ADDITIONAL PART SUFFIXES TO INDICATE COLOR AND/OR PACKAGE QUANTITY.
2. THE FIBERRUNNER 6x4 HORIZONTAL TEE FITTING IS DESIGNED WITH A MINIMUM 2" (50.8) BEND RADIUS TO PROTECT FIBER OPTIC CABLES.
3. DIMENSIONS IN PARENTHESES ARE IN METRIC.

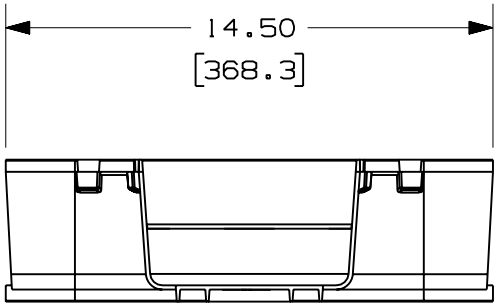

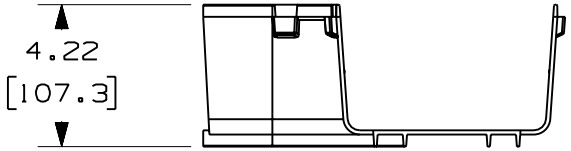

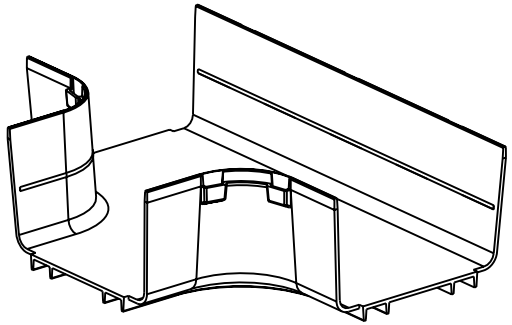

ENG. REF.: D37185DW_DC_FRT6X4_01.prt

CAD FILENAME/LAYERS F FRT6x4.pdf

PANDUIT CORP TINLEY PARK, ILLINOIS

FIBERRUNNER 6x4 HORIZONTAL TEE FITTING (FRT6X4)
CUSTOMER DRAWING

UNLESS OTHERWISE SPECIFIED, DIMENSIONAL TOLERANCES ARE:
(.X) ± (.XXX) ±
(.XX) ±.03 (.8) ANGLES ±

UNLESS OTHERWISE SPECIFIED, ALL DIMENSIONS ARE GIVEN IN INCHES, THIRD ANGLE PROJECTION.

REV	DATE	BY	CHK	DESCRIPTION	ECN	R	CUST	SUP	GMBH
-	- - - - - - - -	- - -	- - -	H. REVISED GENERAL NOTES G. REVISED PART WEIGHT	- - - - - - - -	- -	- -		
3	7-14-06	DTP	RN	F. REVISED CAD FILENAME E. REVISED AND REDRAWN	37185-84	RN	RN		

DRAWN BY JHNU
DATE 5-11-00
CHK'D SMF
MAT'L: ABS
SCALE NONE
DRAWING NO. 37185-84
DWG A
SIZE